Light efficiency:

69 Lumen/Watt

Light quality:

CRI: 93.1

Output: 970 lm

Peak: 4179 cd

Power: 14.0 W

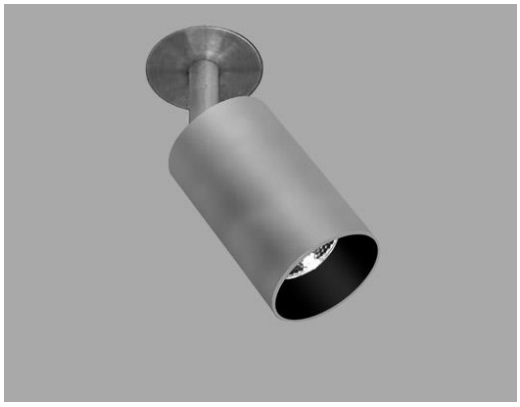

Beam angle

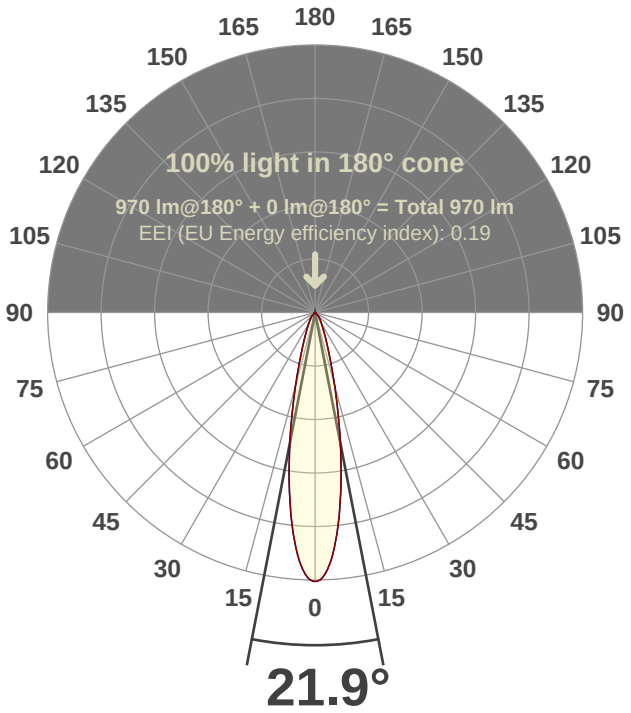

Test number:

SCOM-RA-C14-30k-20°-Rev1A

Luminaire Model:

Scope 2.5" Round Monopoint-C14-30k-20°

Date and time:

9/28/2021 8:55:58 PM

LUM: 970

Spectra

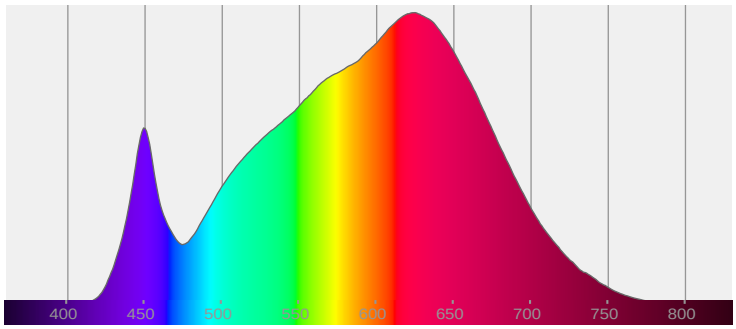

CRI: 93.1 (R1-R8)

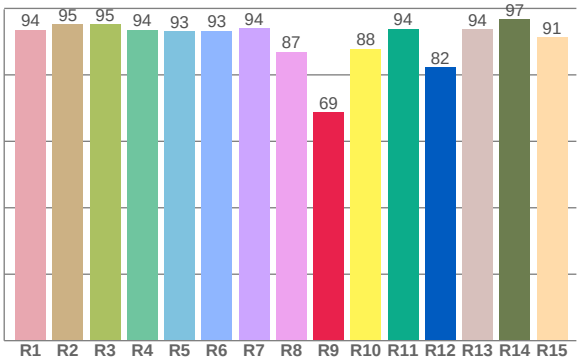

Color parameters

	Color rendering index	Red component	Color fidelity	Color gamut	Color quality scale	Color coordinate cie 1931	Color coordinate cie 1931	Color coordinate	Color coordinate	Color diviation from black body
	CRI	CRI R9	TM30 R_f	TM30 R_g	CQS	x	y	u	v	Δuv
	93.1	68.8	91.8	101.7	90.9	0.423	0.396	0.245	0.344	-0.0013

R_f 91.8

Fidelity index R_f

R_g 101.7

Gammut index R_g

TM-30Color

TM30: 91.8

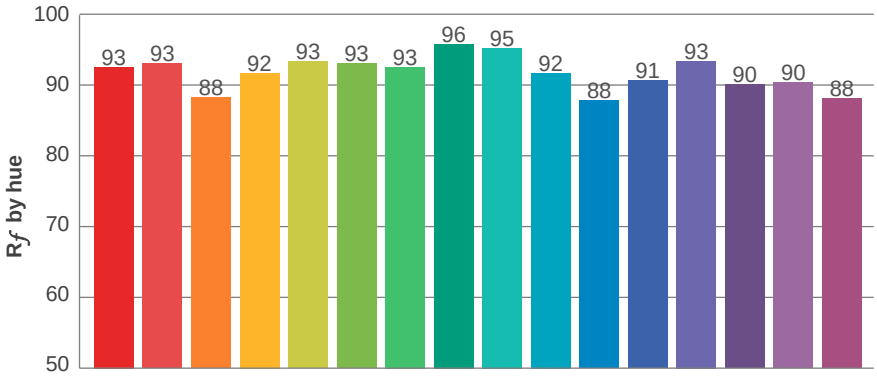

		Graphic shifts (%)	
Hue Bin	R_f	Chroma	Hue
1	93	-4%	-1%
2	93	-3%	3%
3	88	-1%	6%
4	92	2%	5%
5	93	3%	3%
6	93	4%	-1%
7	93	1%	-4%
8	96	0%	-3%
9	95	-2%	0%
10	92	-3%	4%
11	88	0%	8%
12	91	5%	3%
13	93	4%	-1%
14	90	6%	-5%
15	90	2%	-6%
16	88	0%	-10%

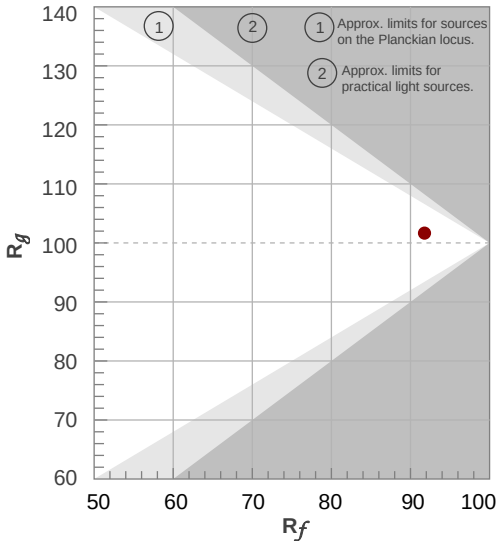

Color vector graphics

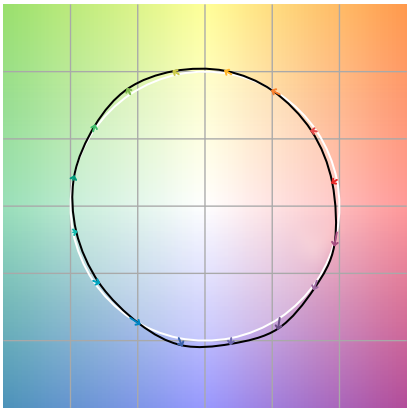

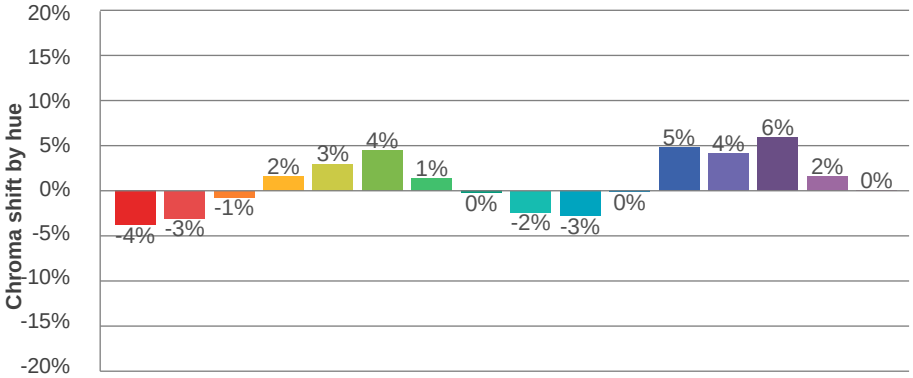

Color distortion

Hue bin

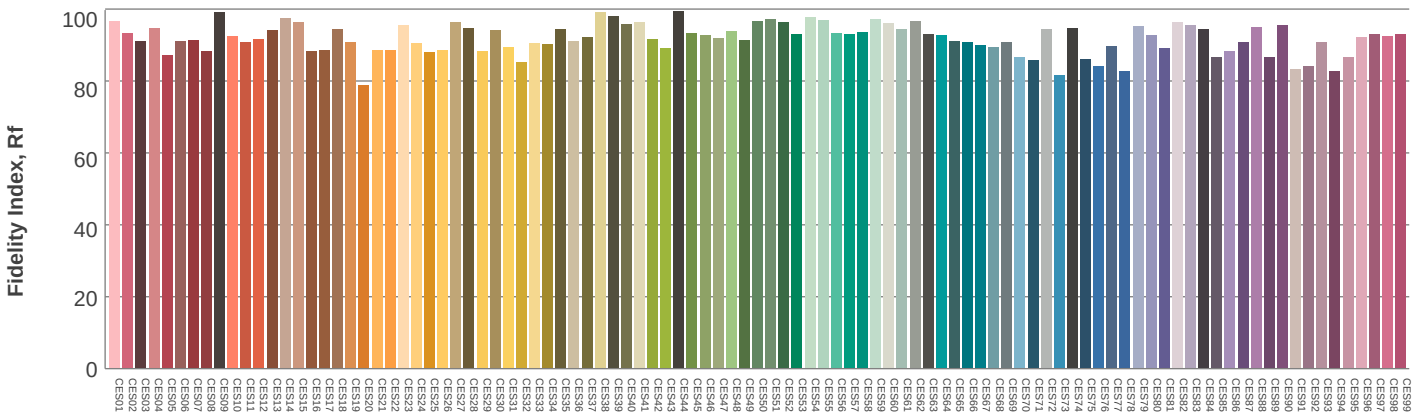

Color Evaluation Sample

Beam details

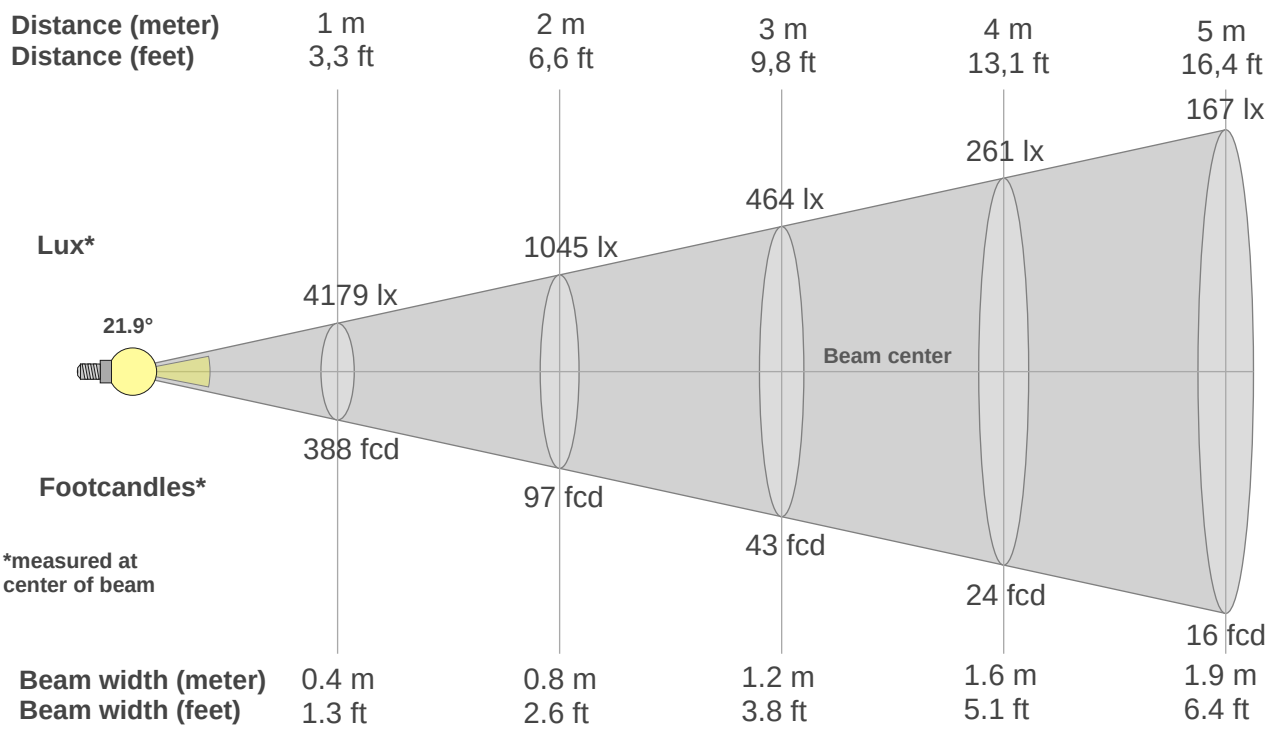

Beam intensities from 1-20m

1m	2m	3m	4m	5m	6m	7m	8m	9m	10m	11m	12m	13m	14m	15m	16m	17m	18m	19m	20m
3.3ft	6.6ft	9.8ft	13.1ft	16.4ft	19.7ft	23ft	26.2ft	29.5ft	32.8ft	36.1ft	39.4ft	42.7ft	45.9ft	49.2ft	52.5ft	55.8ft	59.1ft	62.3ft	65.6ft
4179lx	1045lx	464lx	261lx	167lx	116lx	85lx	65lx	52lx	42lx	35lx	29lx	25lx	21lx	19lx	16lx	14lx	13lx	12lx	10lx
388.2fcd	97.1fcd	43.1fcd	24.3fcd	15.5fcd	10.8fcd	7.9fcd	6.1fcd	4.8fcd	3.9fcd	3.2fcd	2.7fcd	2.3fcd	2fcd	1.7fcd	1.5fcd	1.3fcd	1.2fcd	1.1fcd	1fcd

Intensities in 0° c-plane

0°	2°	4°	6°	8°	10°	12°	14°	16°	18°	20°	22°	24°	26°	28°	30°	32°	34°	36°	38°
4179	4092	3826	3393	2876	2347	1841	1389	1028	774	592	462	366	294	245	208	178	154	135	119
100%	98%	92%	81%	69%	56%	44%	33%	25%	19%	14%	11%	9%	7%	6%	5%	4%	4%	3%	3%

Intensities in 90° c-plane

0°	2°	4°	6°	8°	10°	12°	14°	16°	18°	20°	22°	24°	26°	28°	30°	32°	34°	36°	38°
4179	4092	3826	3393	2876	2347	1841	1389	1028	774	592	462	366	294	245	208	178	154	135	119
100%	98%	92%	81%	69%	56%	44%	33%	25%	19%	14%	11%	9%	7%	6%	5%	4%	4%	3%	3%

Intensities in 180° c-plane

0°	2°	4°	6°	8°	10°	12°	14°	16°	18°	20°	22°	24°	26°	28°	30°	32°	34°	36°	38°
4179	4092	3826	3393	2876	2347	1841	1389	1028	774	592	462	366	294	245	208	178	154	135	119
100%	98%	92%	81%	69%	56%	44%	33%	25%	19%	14%	11%	9%	7%	6%	5%	4%	4%	3%	3%

Intensities in 270° c-plane

0°	2°	4°	6°	8°	10°	12°	14°	16°	18°	20°	22°	24°	26°	28°	30°	32°	34°	36°	38°
4179	4092	3826	3393	2876	2347	1841	1389	1028	774	592	462	366	294	245	208	178	154	135	119
100%	98%	92%	81%	69%	56%	44%	33%	25%	19%	14%	11%	9%	7%	6%	5%	4%	4%	3%	3%

Beam angle 50%	Field angle 10%	Cutoff angle 2,5%	Intensity ratio in 120° cone	Intensity ratio in 90° cone
21.9°	**45.7°**	**80.5°**	**99.0%**	**95.1%**

Light planning

Luminaire budgetary diagram

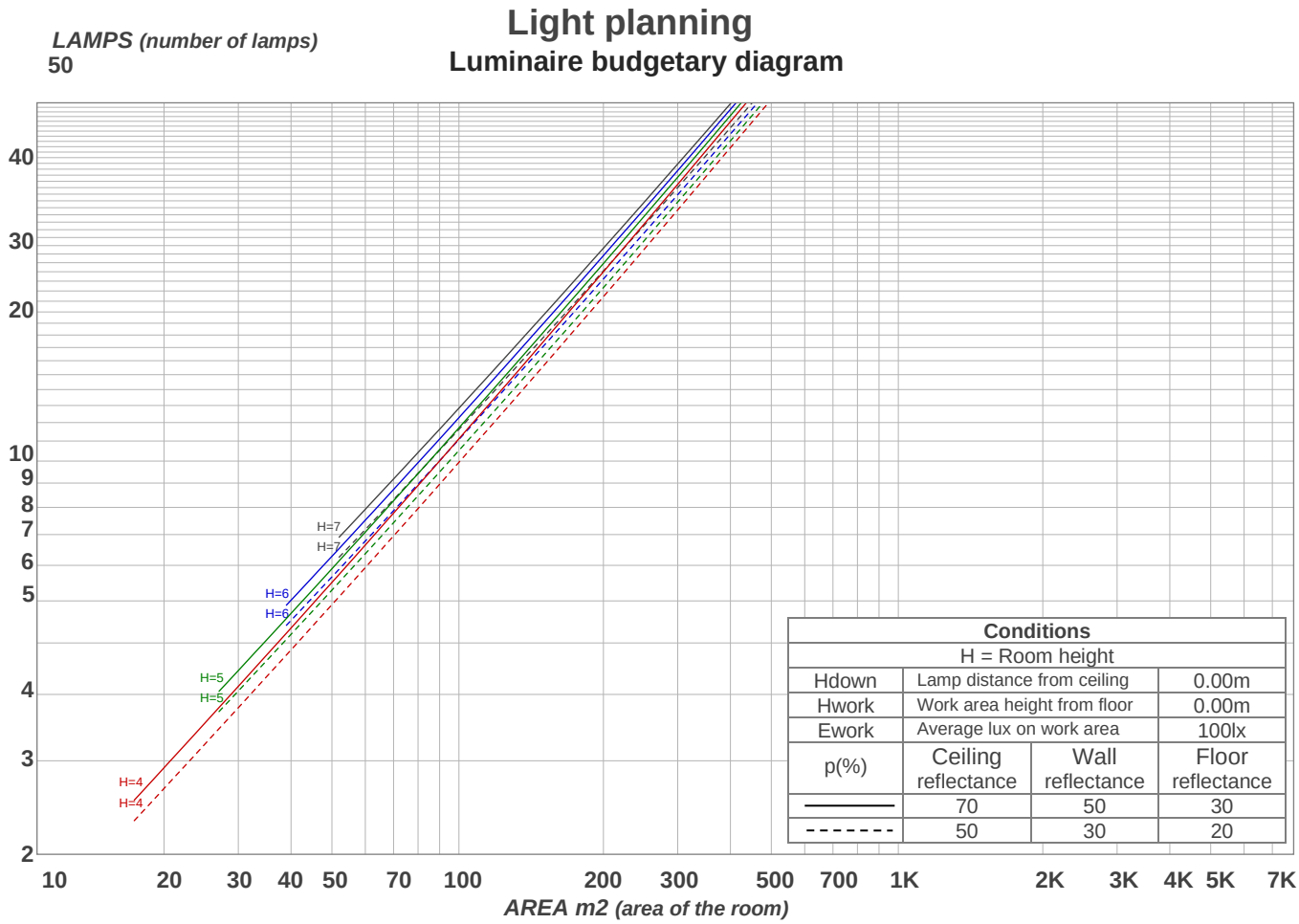

Conditions			
H = Room height			
Hdown	Lamp distance from ceiling		0.00m
Hwork	Work area height from floor		0.00m
Ework	Average lux on work area		100lx
p(%)	Ceiling reflectance	Wall reflectance	Floor reflectance
———	70	50	30
- - - - - - -	50	30	20

Luminaire budgetary diagram

AREA m2 (area of the room)

Coefficients of Utilization

Ceiling reflectance	80				70				50			30			10			0
Wall reflectance	70	50	30	10	70	50	30	10	50	30	10	50	30	10	50	30	10	0
Floor reflectance	20	20	20	20	20	20	20	20	20	20	20	20	20	20	20	20	20	0
RCR	(RCR: Room Cavity Ratio)				Room Values are expressed as percentage of Lumens delivered to the task surface													
0	119	119	119	119	116	116	116	116	111	111	111	106	106	106	102	102	102	100
1	114	112	110	108	112	110	108	106	106	104	103	102	101	100	99	98	97	95
2	110	106	102	99	108	104	101	98	101	98	96	98	96	94	95	93	92	90
3	105	100	96	93	104	99	95	92	96	93	90	94	91	89	92	90	88	86
4	101	95	91	87	100	94	90	87	92	88	86	90	87	85	88	86	84	82
5	98	91	86	83	96	90	86	82	88	84	82	87	83	81	85	82	80	79
6	94	87	82	79	93	86	82	78	85	81	78	84	80	77	82	79	77	76
7	91	84	79	75	90	83	78	75	82	78	75	81	77	74	80	76	74	73
8	88	80	76	72	87	80	75	72	79	75	72	78	74	72	77	74	71	70
9	85	78	73	70	84	77	73	70	76	72	69	75	72	69	75	71	69	68
10	83	75	70	67	82	75	70	67	74	70	67	73	69	67	73	69	67	66

Zonal Lumen Summary

0°-10°	10°-20°	20°-30°	30°-40°	40°-50°	50°-60°	60°-70°	70°-80°	80°-90°
305 lm	337 lm	156 lm	91.5 lm	54.3 lm	16.4 lm	4.01 lm	2.53 lm	2.95 lm

90°-100°	100°-110°	110°-120°	120°-130°	130°-140°	140°-150°	150°-160°	160°-170°	170°-180°
0.000 lm	0.000 lm	0.000 lm	0.000 lm	0.000 lm	0.000 lm	0.000 lm	0.000 lm	0.000 lm

www.specialtylightingindustries.com As a result of our continuous improvement, values are subject to change without notice. These are delivered results and can vary +/- 10% from published source data range.

UGR

p Ceiling		70	70	50	50	30	70	70	50	50	30
p Walls		50	30	50	30	30	50	30	50	30	30
p Floor		20	20	20	20	20	20	20	20	20	20
Room size X	Y	Viewing direction at right angles to lamp axis					Viewing direction parallel to lamp axis				
2H	2H	30.8	31.3	30.9	31.5	31.7	30.8	31.3	30.9	31.5	31.7
	3H	30.6	31.2	31.0	31.4	31.6	30.6	31.2	31.0	31.4	31.6
	4H	30.5	31.2	30.9	31.4	31.6	30.5	31.2	30.9	31.4	31.6
	6H	30.6	31.2	30.9	31.4	31.8	30.6	31.2	30.9	31.4	31.8
	8H	30.7	31.2	31.0	31.5	31.9	30.7	31.2	31.0	31.5	31.9
	12H	30.8	31.2	31.1	31.6	32.0	30.8	31.2	31.1	31.6	32.0
4H	2H	30.5	31.1	30.9	31.4	31.6	30.5	31.1	30.9	31.4	31.6
	3H	30.5	31.0	30.8	31.3	31.7	30.5	31.0	30.8	31.3	31.7
	4H	30.4	30.9	30.8	31.3	31.8	30.4	30.9	30.8	31.3	31.8
	6H	30.5	31.0	31.0	31.3	31.7	30.5	31.0	31.0	31.3	31.7
	8H	30.6	31.1	31.1	31.4	31.8	30.6	31.1	31.1	31.4	31.8
	12H	30.8	31.1	31.3	31.5	32.0	30.8	31.1	31.3	31.5	32.0
8H	4H	30.3	30.8	30.8	31.1	31.5	30.3	30.8	30.8	31.1	31.5
	6H	30.5	30.8	31.0	31.3	31.8	30.5	30.8	31.0	31.3	31.8
	8H	30.8	31.0	31.3	31.5	32.1	30.8	31.0	31.3	31.5	32.1
	12H	31.1	31.3	31.7	31.8	32.4	31.1	31.3	31.7	31.8	32.4
12H	4H	30.3	30.6	30.8	31.0	31.5	30.3	30.6	30.8	31.0	31.5
	6H	30.6	30.8	31.1	31.3	31.9	30.6	30.8	31.1	31.3	31.9
	8H	30.8	31.0	31.4	31.5	32.1	30.8	31.0	31.4	31.5	32.1
Corrected glare indices referring to 970 lm total luminous flux											